ST83003

High voltage fast-switching NPN power transistor

Features

- High voltage capability
- Very high switching speed

Application

- Electronic ballast for fluorescent lighting

Description

The device is manufactured using high voltage multi epitaxial planar technology for high switching speeds and high voltage capability. It uses a cellular emitter structure with planar edge termination to enhance switching speeds while maintaining the wide RBSOA. The ST83003 is expressly designed for a new solution to be used in compact fluorescent lamps, where it is coupled with the ST93003, its complementary PNP transistor.

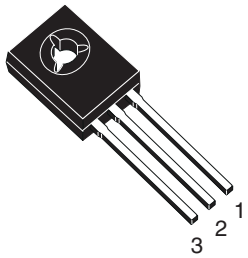

SOT-32

Figure 1. Internal schematic diagram

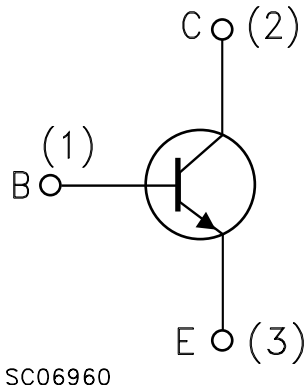

Table 1. Device summary

Order code	Marking	Package	Packaging
ST83003	83003	SOT-32	Bag

Contents

1 Electrical ratings 3

2 Electrical characteristics 4

2.1 Electrical characteristics (curves) 5

3 Test circuits 7

4 Package mechanical data 8

5 Revision history 10

1 Electrical ratings

Table 2. Absolute maximum ratings

Symbol	Parameter	Value	Unit
V_{CES}	Collector-emitter voltage (V_{BE} = 0)	700	V
V_{CEO}	Collector-emitter voltage (I_B = 0)	400	V
V_{EBO}	Emitter-base voltage (I_C = 0, I_B = 0.75 A, t_p < 10 µs)	$V_{(BR)EBO}$	V
I_C	Collector current	1.5	A
I_{CM}	Collector peak current (t_p < 5 ms)	3	A
I_B	Base current	0.75	A
I_{BM}	Base peak current (t_p < 5 ms)	1.5	A
P_{TOT}	Total dissipation at T_c = 25 °C	40	W
T_{STG}	Storage temperature	-65 to 150	°C
T_J	Max. operating junction temperature	150	°C

Table 3. Thermal data

Symbol	Parameter	Value	Unit
R_{thJC}	Thermal resistance junction-case max	3.1	°C/W

2 Electrical characteristics

T_{case} = 25 °C unless otherwise specified

Table 4. On/off states

Symbol	Parameter	Test conditions	Value			Unit
			Min.	Typ.	Max.	
I_{CES}	Collector cut-off current (V_{BE} = 0)	V_{CE} = 700 V V_{CE} = 700 V, T_C = 125 °C			1 5	mA mA
$V_{(BR)EBO}$	Emitter-base breakdown voltage (I_C = 0)	I_E = 10 mA	12		18	V
$V_{CEO(sus)}$ (1)	Collector-emitter sustaining voltage (I_B = 0)	I_C = 10 mA	400			V
$V_{CE(sat)}$ (1)	Collector-emitter saturation voltage	I_C = 0.5 A, I_B = 0.1 A I_C = 0.35 A, I_B = 50 mA			0.5 1	V V
$V_{BE(sat)}$ (1)	Base-emitter saturation voltage	I_C = 0.5 A, I_B = 0.1 A			1	V
h_{FE} (1)	DC current gain	I_C = 10 mA, V_{CE} = 5 V I_C = 0.35 A, V_{CE} = 5 V I_C = 1 A, V_{CE} = 5 V	10 16 4	25	32	
t_r t_s t_f	Resistive load Rise time Storage time Fall time	I_C = 0.35 A, V_{CC} = 125 V, I_{B1} = 70 mA, I_{B2} = -70 mA $t_P \geq$ 25 µs see *Figure 14*	1.5	100 2.2 0.2	2.9	ns µs µs
t_s t_f	Inductive load Storage time Fall time	I_C = 0.5 A, I_{B1} = 0.1 A, $V_{BE(off)}$ = -5 V, L = 10 mH, V_{clamp} = 300 V see *Figure 13*		450 90		ns ns

1. Pulse test: pulse duration ≤ 300 µs, duty cycle ≤ 2 %

2.1 Electrical characteristics (curves)

Figure 2. Safe operating area

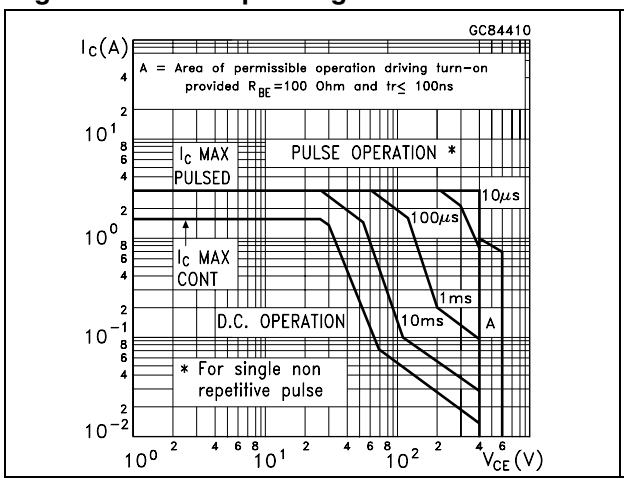

Figure 3. Derating

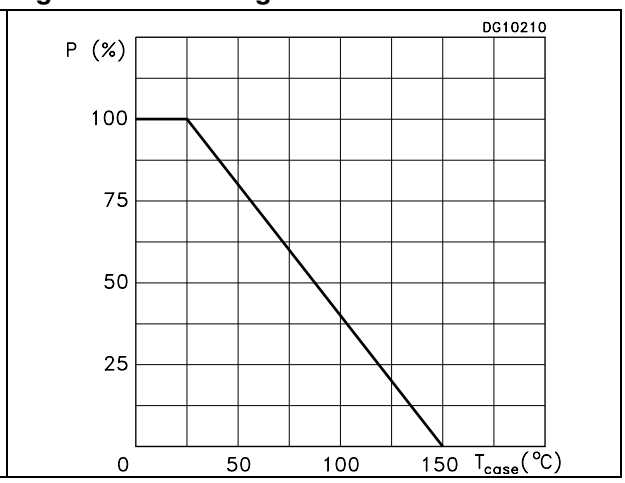

Figure 4. DC current gain (V_{CE} = 5 V)

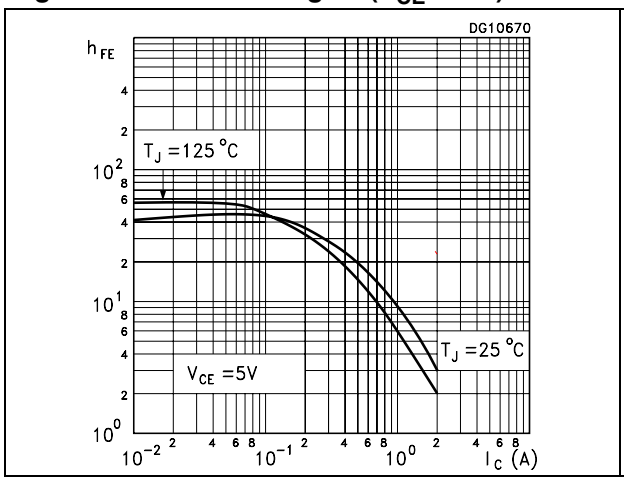

Figure 5. DC current gain (V_{CE} = 1 V)

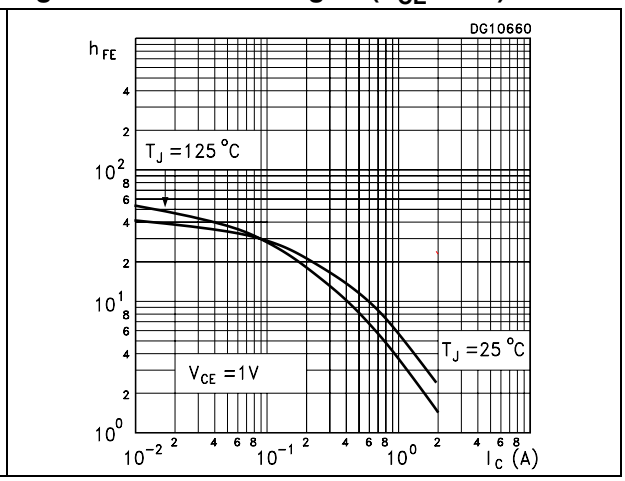

Figure 6. Collector emitter saturation voltage

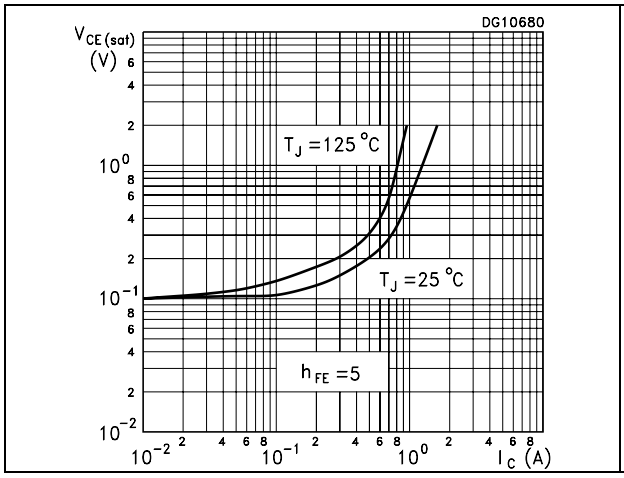

Figure 7. Base emitter saturation voltage

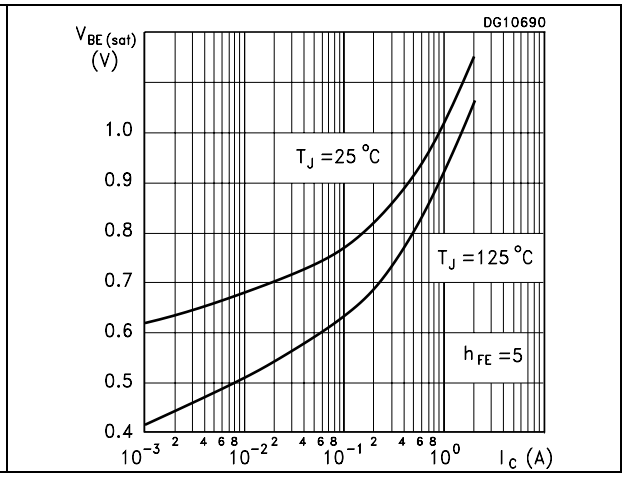

Figure 8. Resistive load fall time

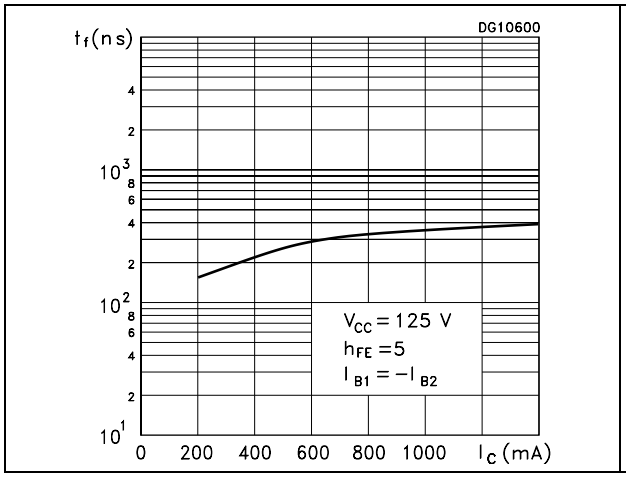

Figure 9. Resistive load storage time

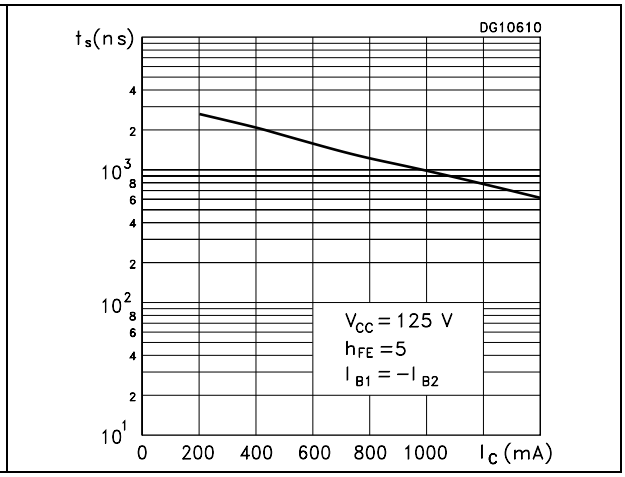

Figure 10. Inductive load fall time

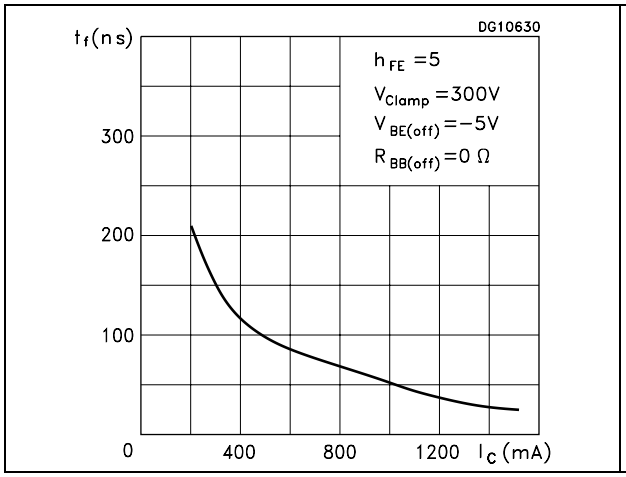

Figure 11. Inductive load storage time

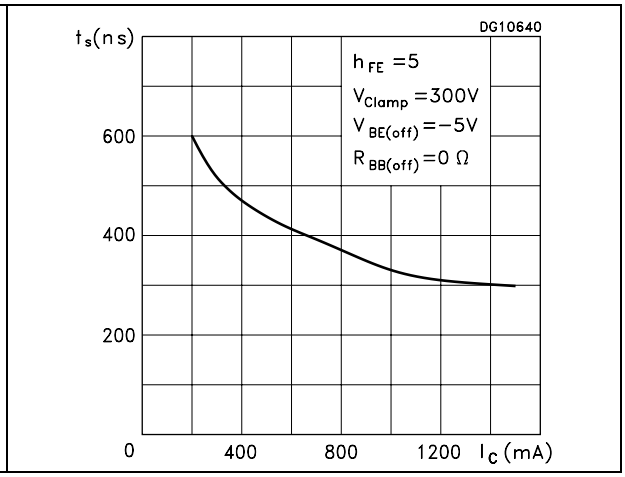

Figure 12. Reverse biased SOA

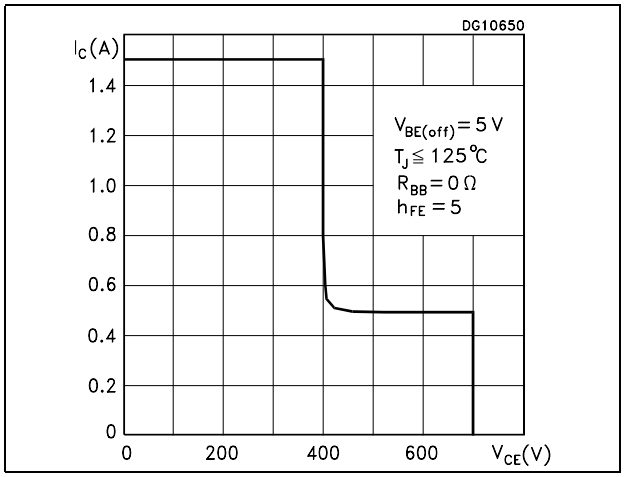

3 Test circuits

Figure 13. Inductive load switching

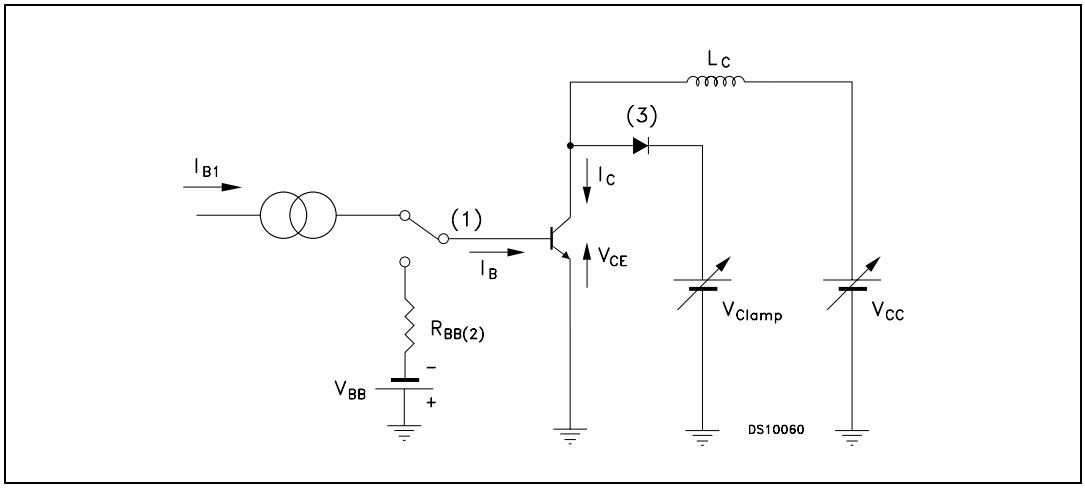

1. Fast electronic switch
2. Non-inductive resistor
3. Fast recovery rectifier

Figure 14. Resistive load switching

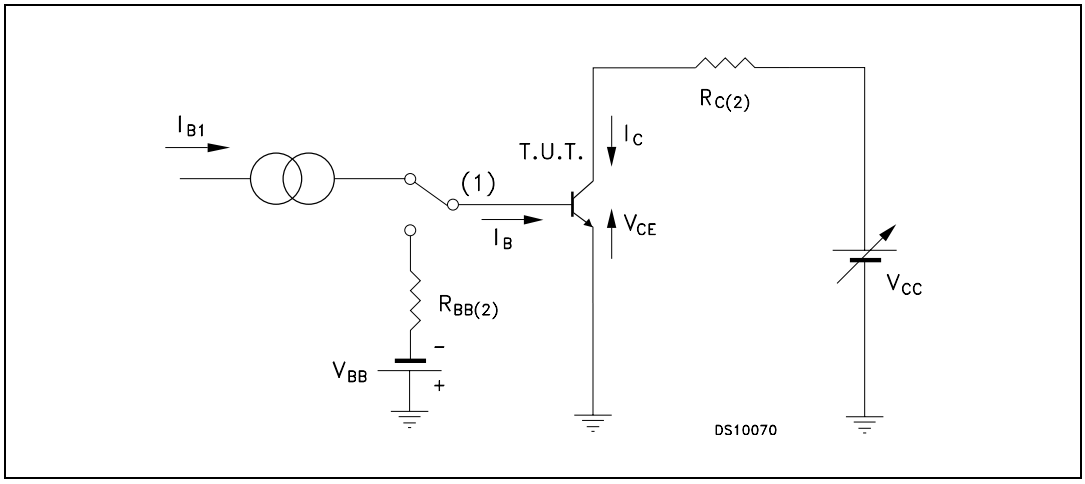

1. Fast electronic switch
2. Non-inductive resistor

4 Package mechanical data

In order to meet environmental requirements, ST offers these devices in different grades of ECOPACK® packages, depending on their level of environmental compliance. ECOPACK® specifications, grade definitions and product status are available at: *www.st.com*. ECOPACK® is an ST trademark.

SOT-32 (TO-126) MECHANICAL DATA

DIM.	mm.		
	MIN.	TYP	MAX.
A	2.4		2.9
B	0.64		0.88
B1	0.39		0.63
D	10.5		11.05
E	7.4		7.8
e	2.04	2.29	2.54
e1	4.07	4.58	5.08
L	15.3		16
P	2.9		3.2
Q		3.8	
Q1	1		1.52
H2		2.15	
I		1.27	

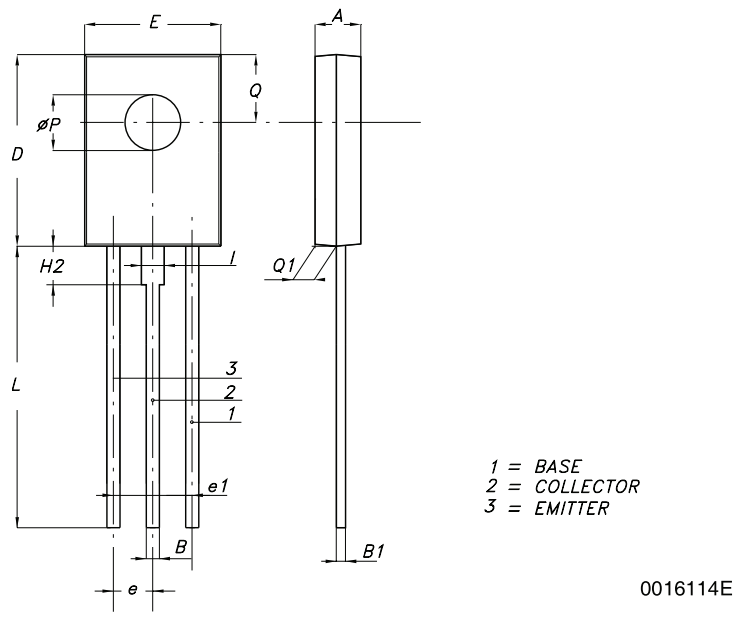

5 Revision history

Table 5. Document revision history

Date	Revision	Changes
16-Oct-2002	1	Initial release
08-Jul-2008	2	Mechanical data has been updated
08-Sep-2009	3	Updated packaging information *Table 1 on page 1*.
03-Dec-2010	4	Added *Table 3: Thermal data on page 3*.

Please Read Carefully:

Information in this document is provided solely in connection with ST products. STMicroelectronics NV and its subsidiaries (“ST”) reserve the right to make changes, corrections, modifications or improvements, to this document, and the products and services described herein at any time, without notice.

All ST products are sold pursuant to ST’s terms and conditions of sale.

Purchasers are solely responsible for the choice, selection and use of the ST products and services described herein, and ST assumes no liability whatsoever relating to the choice, selection or use of the ST products and services described herein.

No license, express or implied, by estoppel or otherwise, to any intellectual property rights is granted under this document. If any part of this document refers to any third party products or services it shall not be deemed a license grant by ST for the use of such third party products or services, or any intellectual property contained therein or considered as a warranty covering the use in any manner whatsoever of such third party products or services or any intellectual property contained therein.

UNLESS OTHERWISE SET FORTH IN ST’S TERMS AND CONDITIONS OF SALE ST DISCLAIMS ANY EXPRESS OR IMPLIED WARRANTY WITH RESPECT TO THE USE AND/OR SALE OF ST PRODUCTS INCLUDING WITHOUT LIMITATION IMPLIED WARRANTIES OF MERCHANTABILITY, FITNESS FOR A PARTICULAR PURPOSE (AND THEIR EQUIVALENTS UNDER THE LAWS OF ANY JURISDICTION), OR INFRINGEMENT OF ANY PATENT, COPYRIGHT OR OTHER INTELLECTUAL PROPERTY RIGHT.

UNLESS EXPRESSLY APPROVED IN WRITING BY AN AUTHORIZED ST REPRESENTATIVE, ST PRODUCTS ARE NOT RECOMMENDED, AUTHORIZED OR WARRANTED FOR USE IN MILITARY, AIR CRAFT, SPACE, LIFE SAVING, OR LIFE SUSTAINING APPLICATIONS, NOR IN PRODUCTS OR SYSTEMS WHERE FAILURE OR MALFUNCTION MAY RESULT IN PERSONAL INJURY, DEATH, OR SEVERE PROPERTY OR ENVIRONMENTAL DAMAGE. ST PRODUCTS WHICH ARE NOT SPECIFIED AS "AUTOMOTIVE GRADE" MAY ONLY BE USED IN AUTOMOTIVE APPLICATIONS AT USER’S OWN RISK.

Resale of ST products with provisions different from the statements and/or technical features set forth in this document shall immediately void any warranty granted by ST for the ST product or service described herein and shall not create or extend in any manner whatsoever, any liability of ST.

ST and the ST logo are trademarks or registered trademarks of ST in various countries.

Information in this document supersedes and replaces all information previously supplied.

The ST logo is a registered trademark of STMicroelectronics. All other names are the property of their respective owners.

© 2010 STMicroelectronics - All rights reserved

STMicroelectronics group of companies

Australia - Belgium - Brazil - Canada - China - Czech Republic - Finland - France - Germany - Hong Kong - India - Israel - Italy - Japan - Malaysia - Malta - Morocco - Philippines - Singapore - Spain - Sweden - Switzerland - United Kingdom - United States of America

www.st.com